Constituent questions in the Grammar Matrix DELPH-IN 2020

Olga Zamaraeva

University of Washington

July 17 2020

Introduction

Constituent questions

Data

Questionnaire

Matrix revisions

New types and customization

Development grammars

Conclusion

References

Introduction

- I added constituent (aka wh-) questions support to the Matrix
  - pending merging into the trunk and held-out languages
- A range in wh-question typology is now covered in the Matrix
- I used append-lists for QUE/SLASH instead of diff-lists
- The analysis of optional fronting appears problematic (inelegant; new features etc.)
- A unified account of wh- and information structure filler-gap constructions is needed
  - See other presentation by me and Guy Emerson

Introduction
Constituent questions
Data
Questionnaire
Matrix revisions
New types and customization
Development grammars
Conclusion
References

Typology

- Question words (all languages)
- Fronting
  - Single, multiple (many languages, e.g. English, Russian)
  - Obligatory, none/*in situ* (many languages); optional (Russian?)
- Question particles (many languages, e.g. Japanese)
- Morphological marking (many languages)
- Interrogative verbs (some languages, e.g. Chukchi)

Introduction
Constituent questions
Data
Questionnaire
Matrix revisions
New types and customization
Development grammars
Conclusion
References

Data: Question words

(1) **Who** did **what where and when**? [eng]

(2) **Which person** did **which thing in which location in space and time**? [mrs-eng]

Introduction
Constituent questions
Data
Questionnaire
Matrix revisions
New types and customization
Development grammars
Conclusion
References

Data: Fronting

(3) What did you say Kim saw? [eng]

(4) *Kim saw what?

(5) Ty **gde** rabotaesh?
2SG **where** work.2SG.PRES
'Where do you work?' [rus]

(6) **Gde** ty rabotaesh?
where 2SG work.2SG.PRES
'Where do you work?' [rus]

Introduction
Constituent questions
Data
Questionnaire
Matrix revisions
New types and customization
Development grammars
Conclusion
References

Data: No fronting (*in situ*) and particles

(7) Dare ga kuru **no**?
who NOM come Q
'Who will come?' [jpn]

(8) *Dare ga kuru **ka**?
who NOM come Q
Intended: 'Who will come?'

(9) Boku wa [dare ga kuru **ka/no**] sitteru
I TOP who NOM come Q know
'I know who will come.' [jpn] (Miyagawa 1987)

Introduction
Constituent questions
Data
Questionnaire
Matrix revisions
New types and customization
Development grammars
Conclusion
References

Data: Morphological marking

(10) a. mit emd'e noŋōn kuded-**ōk**?
our younger.sibling what.for kill-1PL:ITRG
'What have we killed our younger brother for?'
(yux; Maslova 2003, p.153)

b. *mit emd'e noŋōn kuded-j?
our younger.sibling what.for kill-1PL:TR
(intended) 'What have we killed our younger brother for?'

Introduction
Constituent questions
Data
Questionnaire
Matrix revisions
New types and customization
Development grammars
Conclusion
References

Data: Interrogative verbs

Contribute question semantics without explicit noun incorporation (Hagège 2008)

(11) ine- n- req -ēk -w i?
INE- N- **do.what?** -TH -TH
'What are you doing to me?' (ckt; Dunn 1999, p.89)

Introduction
Constituent questions
Data
Questionnaire
Matrix revisions
New types and customization
Development grammars
Conclusion
References

Questionnaire: Demo on the site

- http://matrix.ling.washington.edu/olzama-wh-1/matrix.cgi
- Currently in my branch; not merged into the trunk and put on the main site yet

Introduction
Constituent questions
Data
Questionnaire
Matrix revisions
New types and customization
Development grammars
Conclusion
References

Matrix revisions: QUE and SLASH

- Replace *diff-lists* with *append-lists*
  - Mostly for ease of manipulation but possibly important to be able to do X
- Relax QUE and SLASH constraints throughout the Matrix core to allow length > 1
- Introduce features L-QUE (peripheral boolean) and WH (boolean wrapper)
- Introduce *clist* (canonical list; either empty, or a list of nongaps)

Introduction
Constituent questions
Data
Questionnaire
Matrix revisions
New types and customization
Development grammars
Conclusion
References

Matrix revisions: QUE and SLASH

- Replace *diff-lists* with *append-lists*
  - Mostly for ease of manipulation but possibly important to be able to do X
- Relax QUE and SLASH constraints throughout the Matrix core to allow length > 1
- Introduce features L-QUE (peripheral boolean) and WH (boolean wrapper)
- Introduce *clist* (canonical list; either empty, or a list of nongaps)
  - I suspect that all these new features may be avoided if follow (Ginzburg and Sag 2000) in treating nonfronted wh-words as QUE-empty and explaining "optional fronting" as mixture of wh and non-wh obligatory fronting

Introduction
Constituent questions
Data
Questionnaire
Matrix revisions
New types and customization
Development grammars
Conclusion
References

Matrix revisions: Other

- Added 2nd position particles analysis by Bender (LING567)
- Remove spurious SPR $< >$ constraint on verbs
- Pushed an explicit linking of SUBJ to SLASH in extracted-subj phrase into the InfoStr library
  - A bit of a mystery; see https://delphinqa.ling.washington.edu/t/why-would-an-explicit-link-from-subj-to-slash-be-necessary/522
- Lots of small changes due to new lexical types, e.g. in Lexicon, Case
  - Will systematize while merging into trunk

Introduction
Constituent questions
Data
Questionnaire
Matrix revisions
New types and customization
Development grammars
Conclusion
References

Types: Wh-ques-phrase

$$\left[\begin{array}{l}\textit{Subtype of filler-gap-phrase and interrogative clause} \\ \text{SYNSEM} \left[\begin{array}{ll}\text{LOCAL|CAT} & \left[\begin{array}{ll}\text{MC} & \textit{bool} \\ \text{WH|BOOL} & +\end{array}\right] \\ \text{NON-LOCAL} & \left[\begin{array}{ll}\text{SLASH|LIST} & \boxed{0} \\ \text{REL} & \textit{0-alist} \\ \text{QUE} & \textit{0-alist} \\ \text{YNQ} & \textit{0-alist}\end{array}\right]\end{array}\right] \\ \text{HEAD-DTR|SYNSEM} \left[\begin{array}{ll}\text{L-QUE} & \textit{bool} \\ \text{NON-LOCAL|SLASH|LIST} & \langle [], \ldots \rangle\end{array}\right] \\ \text{NON-HEAD-DTR|SYNSEM|NON-LOCAL|QUE|LIST} \left\langle \textit{ref-ind} \right\rangle \\ \text{ARGS} \left\langle \left[\text{SYNSEM|LOCAL} \; \boxed{1}\left[\text{CAT|HEAD} \; \textit{+nrpd}\right]\right], \left\langle \left[\begin{array}{ll}\text{SYNSEM|NON-LOCAL} & \left[\begin{array}{ll}\text{SLASH|LIST} & \langle \boxed{1} \oplus \boxed{0} \rangle \\ \text{REL} & \textit{0-alist}\end{array}\right]\end{array}\right]\right\rangle \right\rangle\end{array}\right]$$

Types: Insitu-phrase

```
[ unary-phrase and interrogative-clause
  SYNSEM  [ LOCAL|CAT   [ MC    bool
                          VAL   [0]
                          WH    bool ]
            MODIFIED    hasmod
            L-QUE       bool
            NON-LOCAL   [ SLASH  0-alist
                          REL    0-alist
                          QUE    0-alist
                          YNQ    [1] ] ]
  HEAD-DTR|SYNSEM
          [ LOCAL|CAT   [ HEAD   verb
                          VAL    [0] [ SUBJ   ⟨⟩
                                       COMPS  ⟨⟩ ] ]
            NON-LOCAL   [ SLASH     0-alist
                          REL       0-alist
                          QUE|LIST  ⟨ ref-ind, ... ⟩
                          YNQ       [1] ] ] ]
```


Introduction
Constituent questions
Data
Questionnaire
Matrix revisions
New types and customization
Development grammars
Conclusion
References

Types: Head-adjunct phrase

$$\begin{bmatrix} \textit{Subtype of head-adj-int-phrase} & & \\ \text{HEAD-DTR}|\text{SYNSEM} & \begin{bmatrix} \text{LOCAL}|\text{CAT} & \begin{bmatrix} \text{HEAD} & +nvr \\ \text{VAL}|\text{SUBJ} & clist \end{bmatrix} \\ \text{L-QUE} & bool \end{bmatrix} \\ \text{NON-HEAD-DTR}|\text{SYNSEM} & \begin{bmatrix} \text{LOCAL}|\text{CAT} & \begin{bmatrix} \text{HEAD} & +jrp \\ \text{VAL}|\text{COMPS} & \langle\rangle \end{bmatrix} \\ \text{L-QUE} & bool \end{bmatrix} \end{bmatrix}$$

Matrix verbs used to be spuriously constrained to be SPR-empty; adding head-adjunct rule exposed that (adpositions need to modify SPR *cons* nouns, but also verbs!). A lot of SPECs had to be added...

Introduction
Constituent questions
Data
Questionnaire
Matrix revisions
New types and customization
Development grammars
Conclusion
References

Types: Question pronoun

$$
\begin{bmatrix}
\text{SYNSEM} & \begin{bmatrix}
\text{LOCAL} & \begin{bmatrix}
\text{CAT} & \begin{bmatrix}
\text{HEAD} & \begin{bmatrix} \textit{noun} \\ \text{MOD } \langle\rangle \end{bmatrix} \\
\text{VAL} & \begin{bmatrix} \text{SPR} & \langle\rangle \\ \text{SPEC} & \langle\rangle \\ \text{SUBJ} & \langle\rangle \\ \text{COMPS} & \langle\rangle \end{bmatrix} \\
\text{WH|BOOL} & + \end{bmatrix} \\
\text{CONT} & \begin{bmatrix}
\text{HOOK} & \begin{bmatrix} \text{LTOP} & \boxed{5} \\ \text{INDEX} & \boxed{4} \end{bmatrix} \\
\text{RELS|LIST} & \left\langle \boxed{3} \begin{bmatrix} \text{LBL} & \boxed{0} \\ \text{ARG0} & \boxed{1} \left[\textit{ref-ind} \right] \end{bmatrix}, \begin{bmatrix} \textit{quant-relation} & \\ \text{PRED} & \text{“which-q-rel”} \\ \text{RSTR} & \boxed{2} \end{bmatrix} \right\rangle \\
\text{HCONS|LIST} & \left\langle \begin{bmatrix} \text{HARG} & \boxed{2} \\ \text{LARG} & \boxed{0} \end{bmatrix} \right\rangle
\end{bmatrix}
\end{bmatrix} \\
\text{ICONS } \textit{0-alist} & \\
\text{LKEYS|KEYREL} & \boxed{3} \begin{bmatrix} \text{LBL} & \boxed{5} \\ \text{ARG0} & \boxed{4} \end{bmatrix} \\
\text{NON-LOCAL} & \begin{bmatrix} \text{QUE|LIST} & \left\langle \boxed{1} \right\rangle \\ \text{REL} & \textit{0-alist} \\ \text{SLASH} & \textit{0-alist} \end{bmatrix} \\
\text{L-QUE} & + \end{bmatrix}
\end{bmatrix}
$$

Introduction
Constituent questions
Data
Questionnaire
Matrix revisions
New types and customization
Development grammars
Conclusion
References

Question pronoun: MRS

Who chases what?

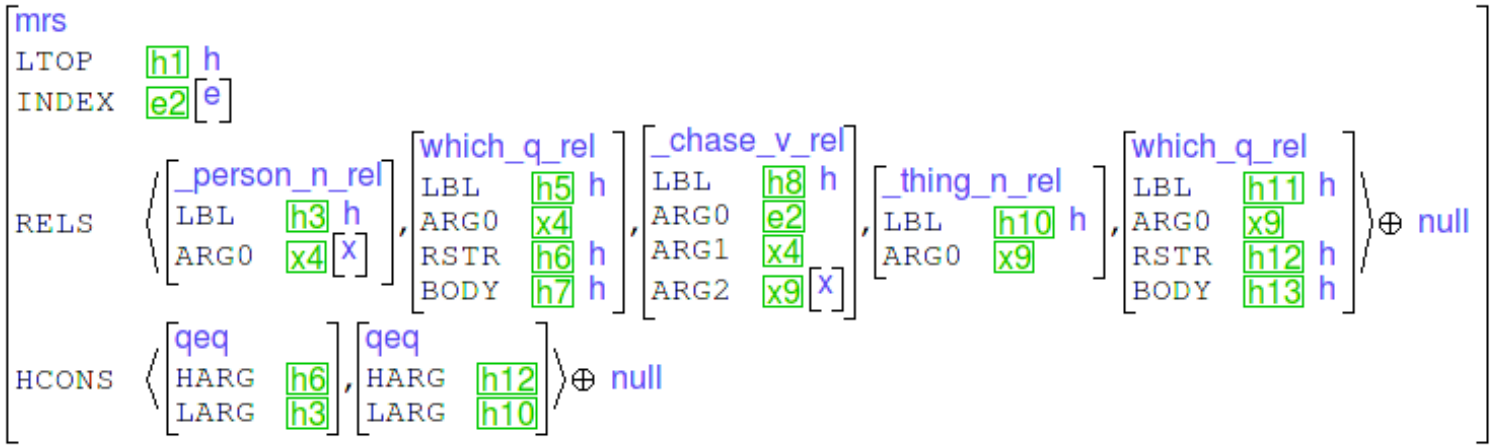

Types: Question determiner

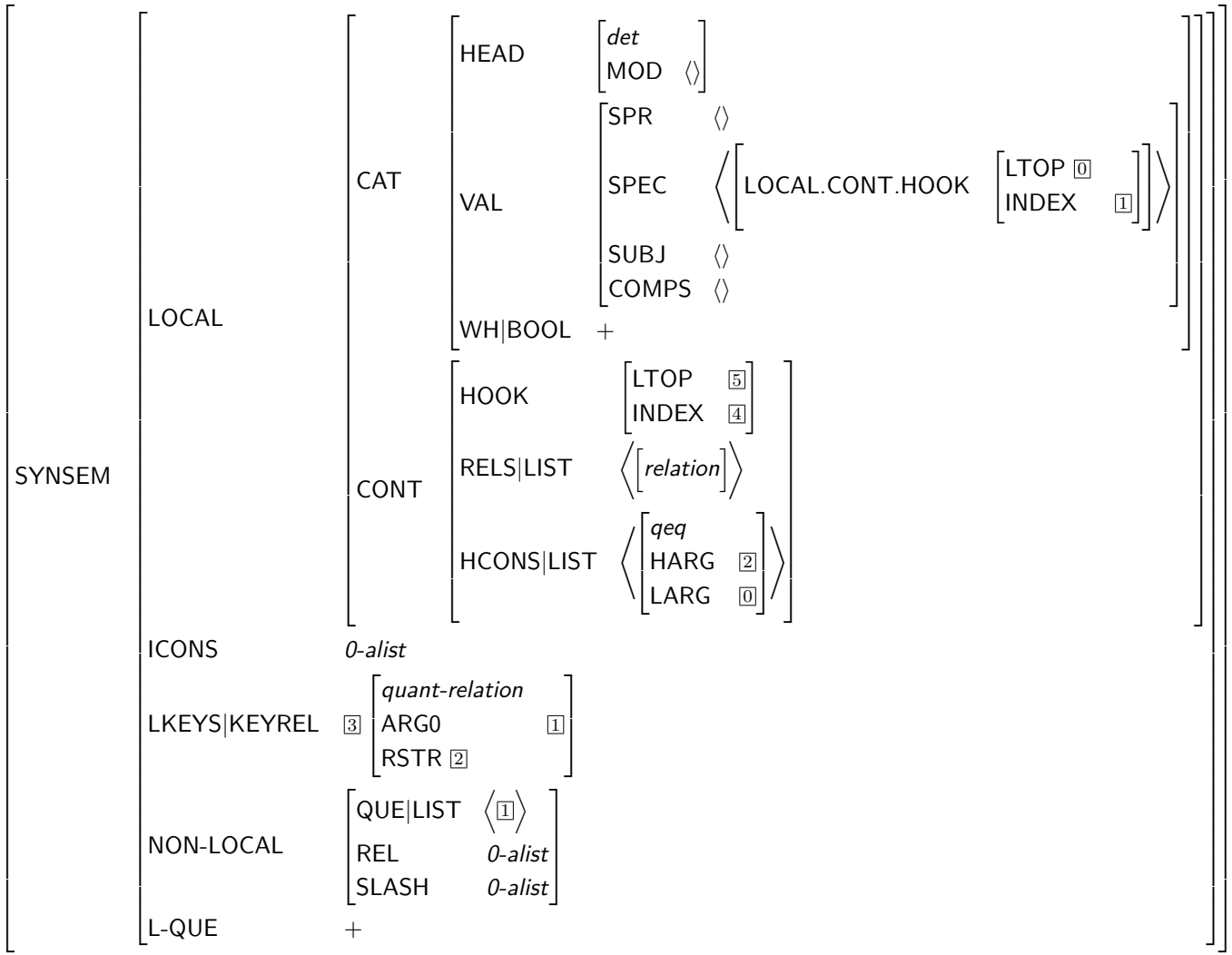

Question determiner: MRS

Which cat sleeps?

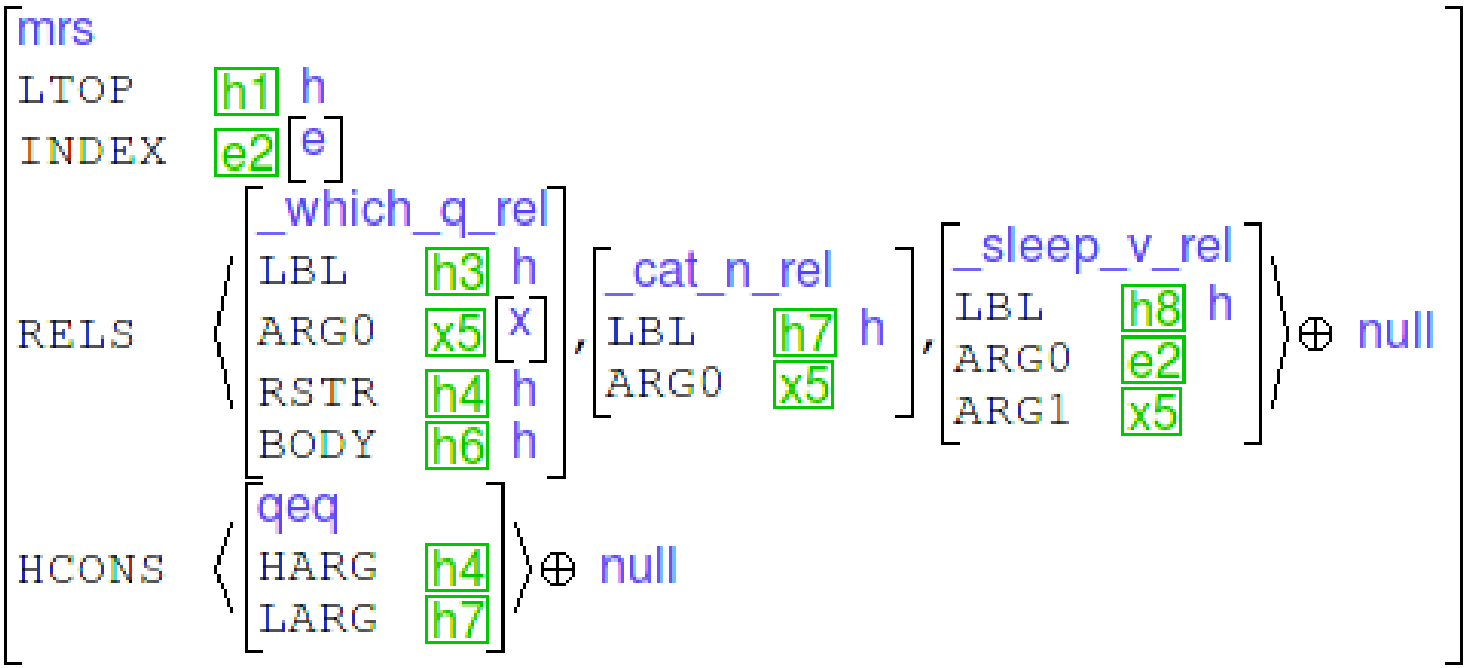

Types: Question adverb

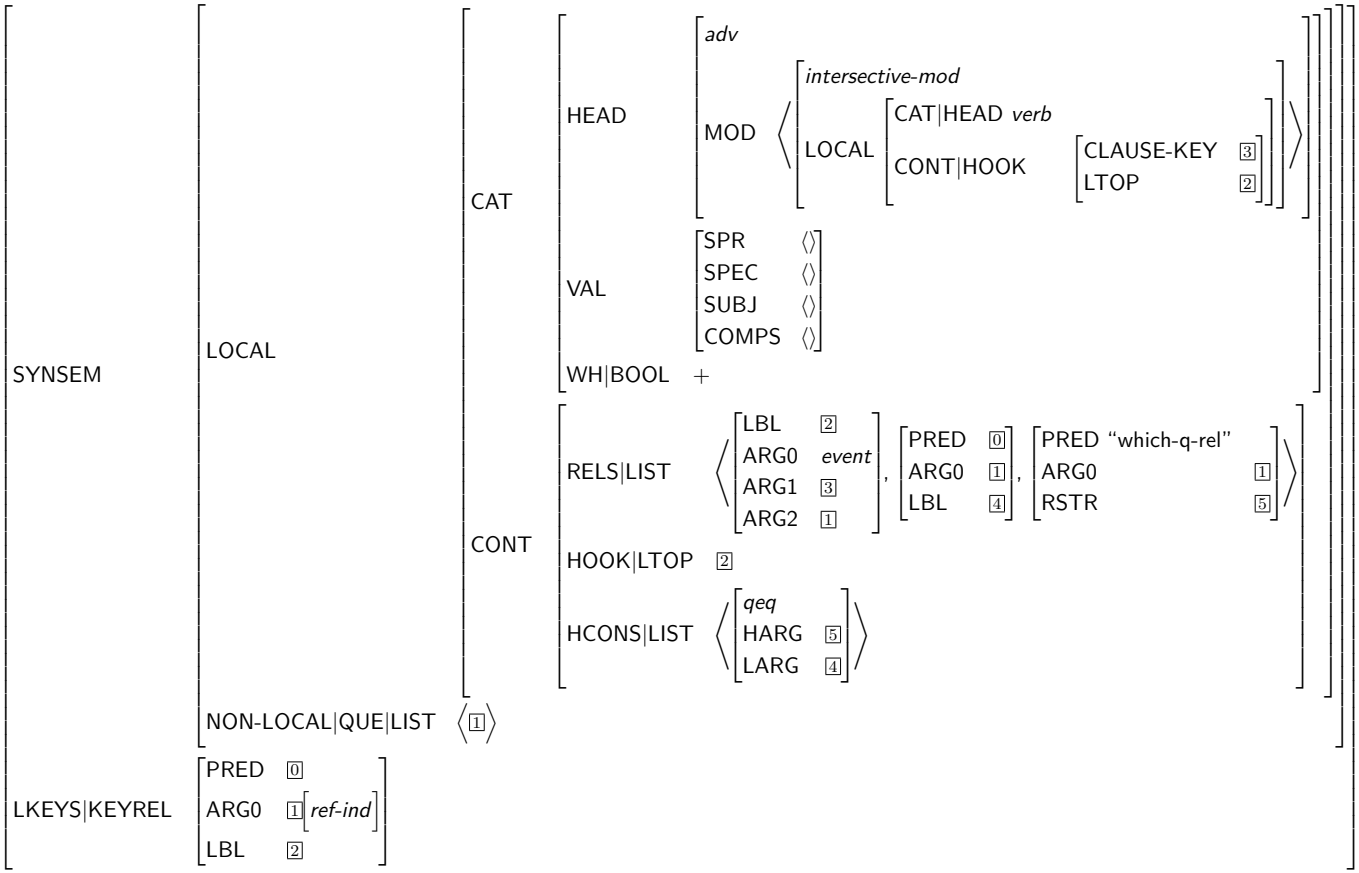

Question adverb: MRS

Where do the cats sleep?

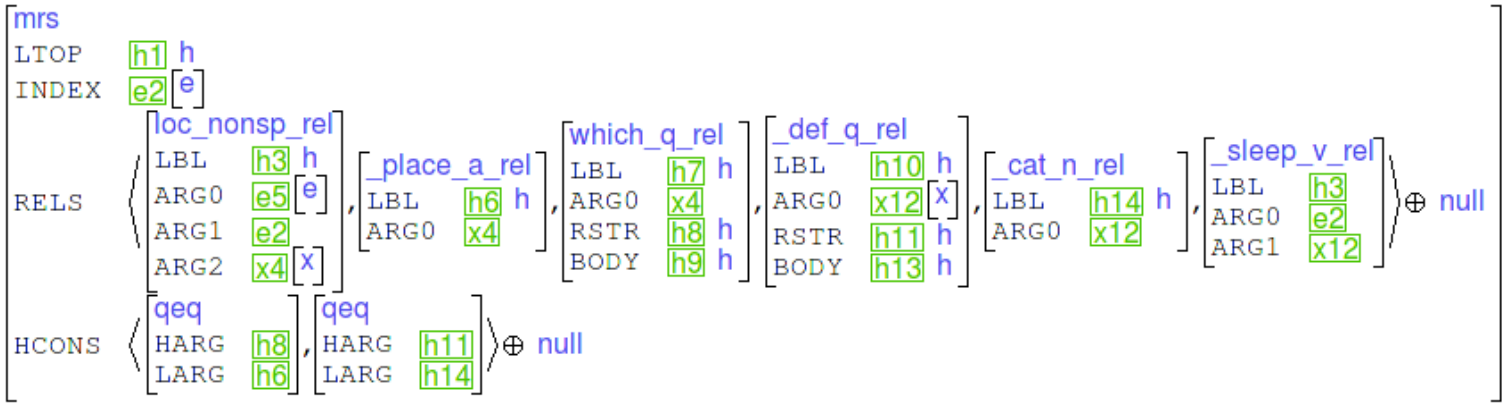

Introduction
Constituent questions
Data
Questionnaire
Matrix revisions
New types and customization
Development grammars
Conclusion
References

Types: Question verb

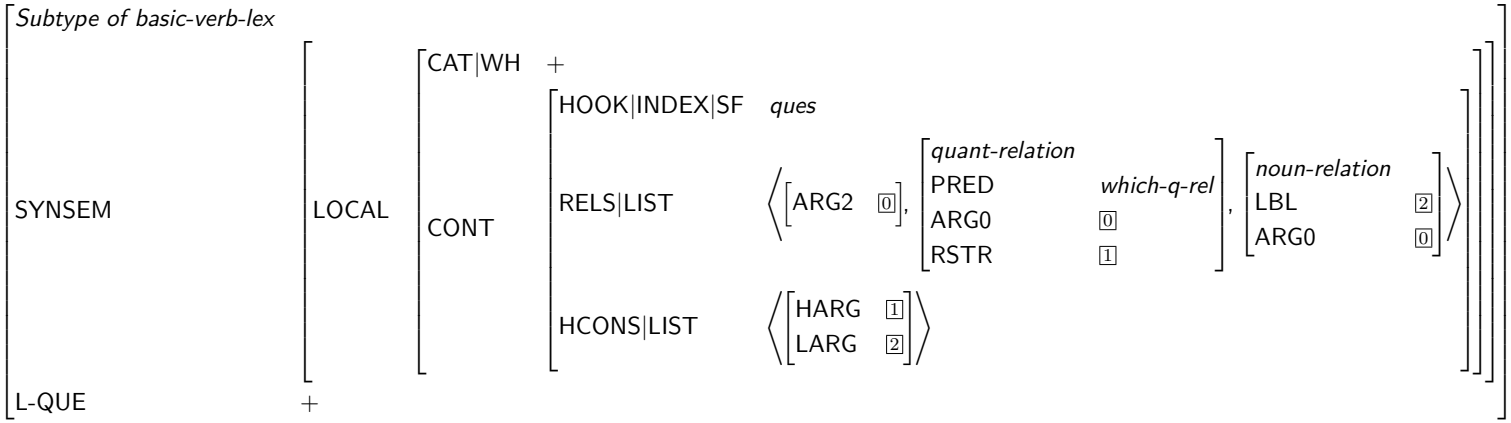

Introduction
Constituent questions
Data
Questionnaire
Matrix revisions
New types and customization
Development grammars
Conclusion
References

Question verb: MRS

What are you doing to me?

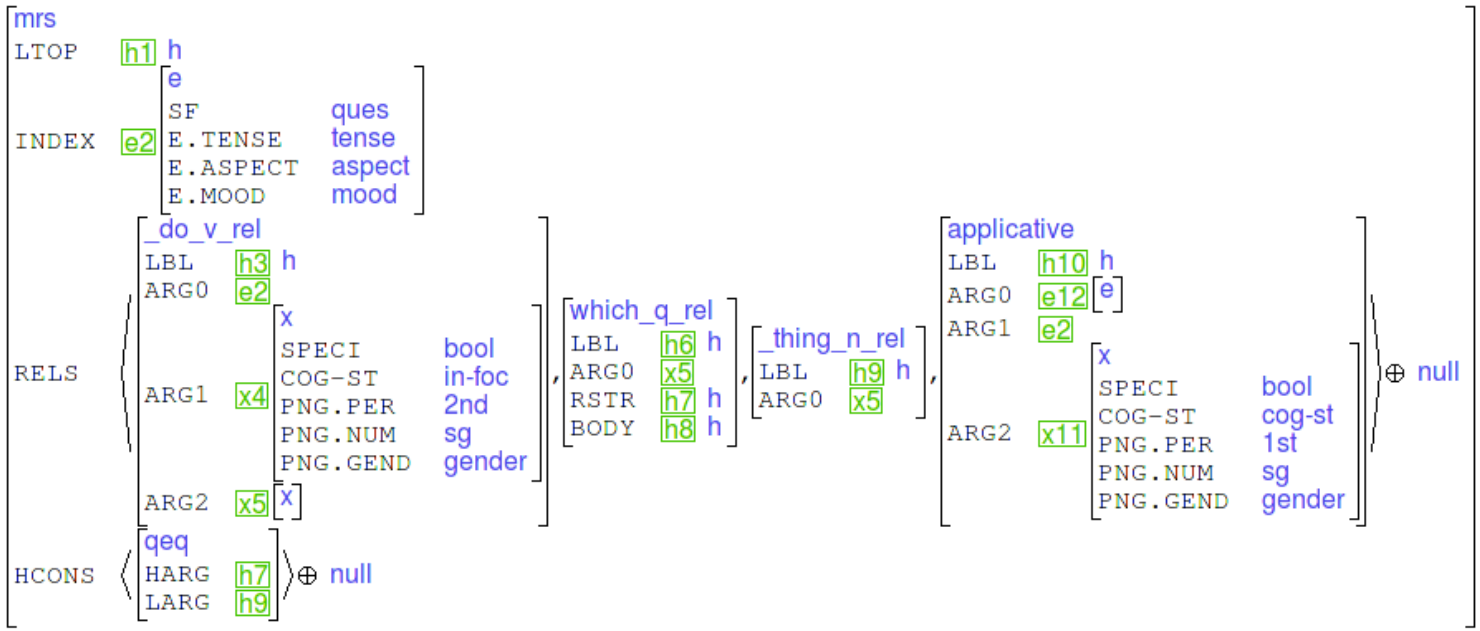

Featuring also valence change library by Curtis (2018)!

Question particles

- Subtypes of *complementizer* or a modifier-clitic (2nd position)
- Managed with MC and (new) WH features

Mandarin *ma*:

	polar	*wh-*
main	obligatory	impossible
embed	obligatory	impossible

$$\left[\begin{array}{l} \textit{Subtype of complementizer-lex} \\ \text{SYNSEM}|\ldots|\text{COMPS} \quad \left\langle \left[\text{WH}|\text{BOOL} \quad -\right] \right\rangle \end{array}\right]$$

Development grammars

Language	Family	Gram./ungram.	cov%	overgen%	avg. ambig	Phenomena
Russian	IE	207/87	67.6	5.7	1.77	Optional multiple fronting, second position particles, case, free word order, coordination embedded clauses
English	IE	27/23	100	17.4	1.11	Single obligatory fronting, subject-auxiliary inversion embedded clauses
Yukaghir	Yukaghiric	10/14	100	7.1	1.1	Morphological marking, focus case
Japanese	Japonic	7/3	100	0	1.14	*In situ*, optional particles embedded clauses
Chukchi	Chuk-Kam	6/0	100	n/a	1.33	Interrogative verbs

Evaluation to be done in the next few weeks.

Introduction
Constituent questions
Data
Questionnaire
Matrix revisions
New types and customization
Development grammars
Conclusion
References

Conclusion

- Several constituent question strategies now covered in the Matrix
- Support for adverbs, adpositions
- Changes in the core mostly in relaxing QUE/SLASH constraints
- New types and features: L-QUE, WH
  - WH actually useful for more than one thing (particles and embedded questions)
- Append-lists work well overall, pending a few investigations
- Wh-filler-gap rule
  - Needs to be better integrated with InfoStr rules
- Unary rules for *in situ* and 2nd position clitic questions
  - Mostly unproblematic unless include optional fronting

Introduction
Constituent questions
Data
Questionnaire
Matrix revisions
New types and customization
Development grammars
Conclusion
References

References I

Christian Michael Curtis. 2018. A parametric implementation of valence-changing morphology in the lingo grammar matrix. Master's thesis.

Michael John Dunn. 1999. *A grammar of Chukchi*. The Australian National University.

Jonathan Ginzburg and Ivan Sag. 2000. *Interrogative investigations*. Stanford: CSLI publications.

Claude Hagège. 2008. Towards a typology of interrogative verbs. *Linguistic typology*, 12:1–44.

Elena Maslova. 2003. *A grammar of Kolyma Yukaghir*, volume 27. Walter de Gruyter.

Shigeru Miyagawa. 1987. Lf affix raising in japanese. *Linguistic Inquiry*, 18(2):362–367.